EUROLINE STEEL WINDOWS & DOORS

SERIES 900 THERMAL STEEL FRENCH/SINGLE DOOR (WZ4) (IMPACT)

GENERAL NOTES:

1. THE PRODUCT SHOWN HEREIN IS DESIGNED AND MANUFACTURED TO COMPLY WITH THE CURRENT EDITION FLORIDA BUILDING CODE (FBC) **EXCLUDING** HVHZ. ALL PRODUCTS UNDER THE SCOPE OF THIS DOCUMENT HAVE BEEN EVALUATED ACCORDING TO THE FOLLOWING:
   - AAMA/WDMA/CSA 101/I.S.2/A440-22
   - ASTM E283/E283M-19
   - ASTM E330/E330M-14(21)
   - ASTM E331-00(23)
   - ASTM E1886-19
   - ASTM E1996-23
2. ADEQUACY OF THE EXISTING STRUCTURAL CONCRETE/MASONRY, 2X STUD FRAMING AS A MAIN WIND FORCE RESISTING SYSTEM CAPABLE OF WITHSTANDING AND TRANSFERRING APPLIED PRODUCT LOADS TO THE FOUNDATION IS THE RESPONSIBILITY OF THE ENGINEER OR ARCHITECT OF RECORD FOR THE PROJECT OF INSTALLATION.
3. 1X AND 2X BUCKS (WHEN USED) SHALL BE DESIGNED AND ANCHORED TO PROPERLY TRANSFER ALL LOADS TO THE STRUCTURE. BUCK DESIGN AND INSTALLATION IS THE RESPONSIBILITY OF THE ENGINEER OR ARCHITECT OF RECORD FOR THE PROJECT OF INSTALLATION.
4. THE INSTALLATION DETAILS DESCRIBED HEREIN ARE GENERIC AND MAY NOT REFLECT ACTUAL CONDITIONS FOR A SPECIFIC SITE. IF SITE CONDITIONS CAUSE INSTALLATION TO DEVIATE FROM THE REQUIREMENTS DETAILED HEREIN, A LICENSED ENGINEER OR ARCHITECT SHALL PREPARE SITE SPECIFIC DOCUMENTS FOR USE WITH THIS DOCUMENT.
5. APPROVED IMPACT PROTECTIVE SYSTEM **IS NOT REQUIRED** TO PROTECT THIS PRODUCT IN AREAS REQUIRING IMPACT RESISTANCE.
6. FRAME MATERIAL: STEEL (MIN. Fy = 33 ksi).
7. ALL STRUCTURAL MATERIALS & DISSIMILAR METALS SHALL BE PROTECTED, TREATED, PAINTED, COATED, AND/OR ISOLATED AS REQUIRED IN THE APPLICABLE SECTIONS OF THE CURRENT FLORIDA BUILDING CODE AND REFERENCED DESIGN SPECIFICATIONS.
8. GLASS MEET THE REQUIREMENTS OF ASTM E 1300 GLASS CHARTS. SEE SHEET 1 FOR GLAZING DETAILS.

TABLE OF CONTENTS

SHEET	SHEET DESCRIPTION
1	GENERAL NOTES AND GLAZING DETAIL
2	TYPICAL ELEVATIONS AND DESIGN PRESSURE TABLE
3	ALTERNATE ELEVATIONS
4	ANCHOR LAYOUTS
5	VERTICAL SECTIONS
6	HORIZONTAL SECTIONS
7	INSTALLATION DETAILS AND NOTES

DESIGN PRESSURE RATING

FRAME SIZE	DESIGN PRESSURE	MISSILE RATING
SEE SHEET 2		LARGE AND SMALL MISSILE IMPACT

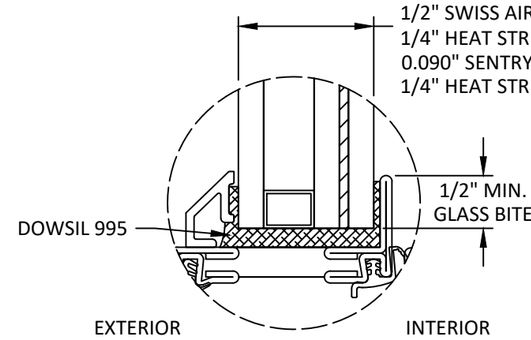

GLAZING DETAIL

GLAZING NOTES:

1. GLASS TYPE & THICKNESS COMPLIES WITH ASTM E1300 REQUIREMENTS AS WELL AS APPLICABLE SAFETY GLAZING REQUIREMENTS PER THE FBC. TEMPER AND SAFETY GLAZING REQUIREMENTS SHALL BE REVIEWED ON A SITE SPECIFIC BASIS.
2. SETTING BLOCK DUROMETER HARDNESS OF 70-90 (SHORE A) AS REFERENCED IN FBC CHAPTER 24.
3. SETTING BLOCKS TO BE LOCATED AT 1/4 SPAN LENGTH FOR GLASS WIDER THAN 36" AS PER FBC CHAPTER 24.
4. D.L.O. AND DESIGN PRESSURES MAY NOT EXCEED MAX VALUES IN SHEET 2.

EUROLINE STEEL WINDOWS & DOORS

22600 SAVI RANCH PKWY
YORBA LINDA, CA 92887
PH: (877) 590-2714

TITLE: SERIES 900 THERMAL STEEL FRENCH/ SINGLE DOOR (WZ4) (IMPACT)
GENERAL NOTES & GLAZING DETAIL

PREPARED BY: BUILDING DROPS, INC.
1900 NE MIAMI COURT, SUITE 2-15
MIAMI, FL 33132
PH: (954) 399-8478
FAX: (954) 744-4738
WEB: www.buildingdrops.com

REMARKS	BY	DATE
A. 2026 FBC UPDATE	MS	7/21/2026

THE INSTALLATION DETAILS DESCRIBED HEREIN ARE GENERIC AND MAY NOT REFLECT ACTUAL CONDITIONS FOR A SPECIFIC SITE. IF SITE CONDITIONS CAUSE INSTALLATION TO DEVIATE FROM THE REQUIREMENTS DETAILED HEREIN, A LICENSED ENGINEER OR ARCHITECT SHALL PREPARE SITE SPECIFIC DOCUMENTS FOR USE WITH THIS DOCUMENT.

Digitally signed by Hermes F. Norero, P.E.
Reason: I am approving this document
Date: 2026.08.07 19:12:40 -04'00'

HERMES F. NORERO LICENSE No. 73778 STATE OF FLORIDA PROFESSIONAL ENGINEER

HERMES F. NORERO, P.E.
FLORIDA P.E. No 73778
BUILDING DROPS, INC
1900 NE MIAMI COURT, SUITE 2-15
MIAMI, FL 33132
FBPE CERT. OF AUTHORIZATION No. 29578

FL #: FL47872

DATE: 10.20.2025

DWG. BY: MS | CHK. BY: HFN

SCALE: NTS

DWG. #: ELS010

SHEET: 1 OF 7 | REV. A

7/27/2026 4:40 PM
c:\users\mengqibun\building drops, inc\building drops landing - common\projects\2026 code change projects\euroline steel windows & doors\jc-26-0522.2 - 2026 code change\dwgs\els010 - a.dwg

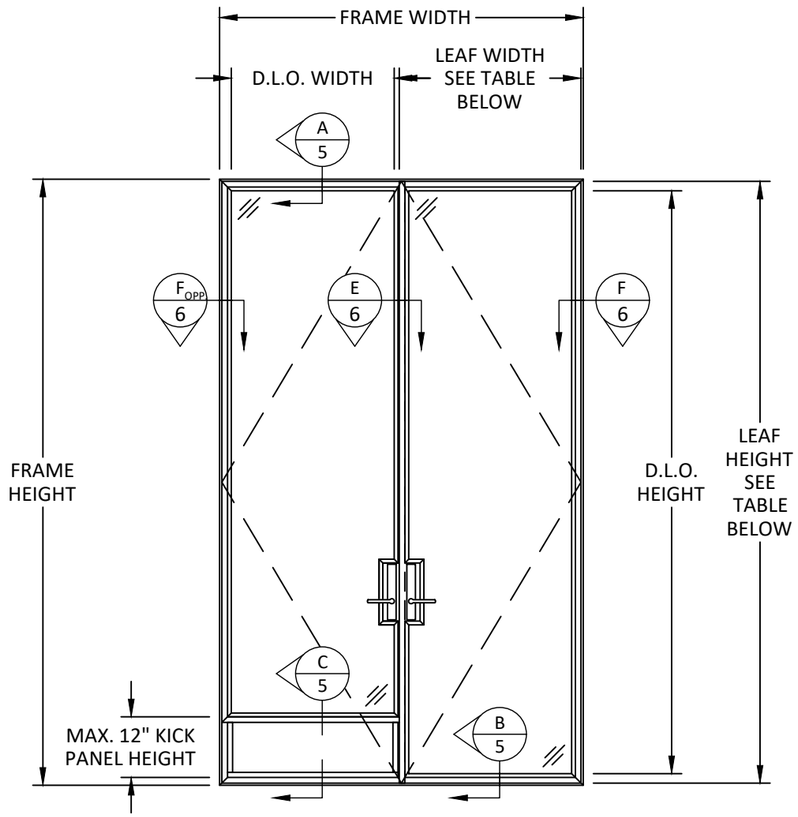

TYPICAL ELEVATION

FRENCH DOOR

FRAME HEIGHT = LEAF HEIGHT + 7/8"
FRENCH DOOR FRAME WIDTH = 2 × LEAF WIDTH
SINGLE DOOR FRAME WIDTH = LEAF WIDTH + 7/8"

D.L.O. HEIGHT = LEAF HEIGHT - 3 3/4"
D.L.O. WIDTH = LEAF WIDTH - 3 3/4"

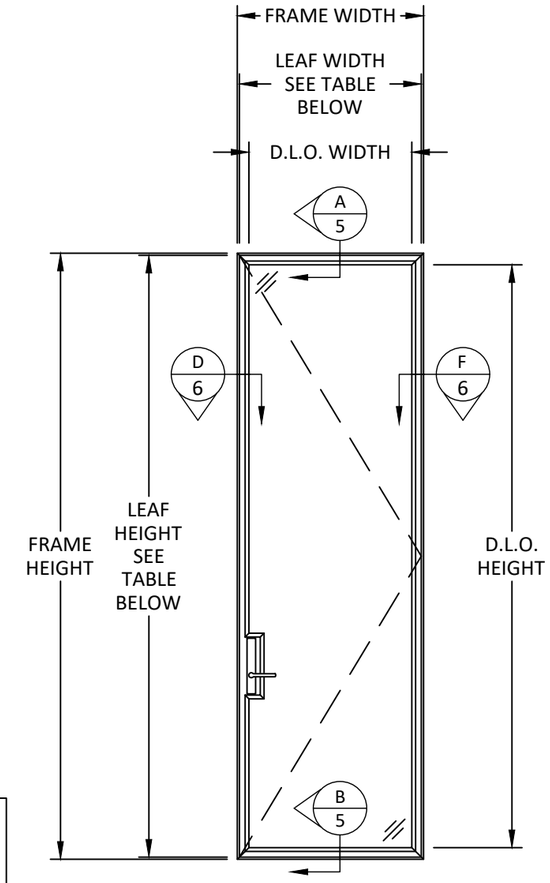

TYPICAL ELEVATION

SINGLE DOOR

DESIGN PRESSURE TABLE (+/- PSF) - FRENCH DOOR										
LEAF HEIGHT (IN.)	LEAF WIDTH (IN.)									
	24	27	30	33	36	39	42	45	48	51
79 1/8	65.00	65.00	65.00	65.00	65.00	47.19	35.09	26.62	20.57	16.14
83 1/8	65.00	65.00	65.00	65.00	65.00	47.19	35.09	26.62	20.57	-
89 1/8	65.00	65.00	65.00	65.00	65.00	47.19	35.09	26.62	-	-
95 1/8	65.00	65.00	65.00	65.00	65.00	47.19	35.09	-	-	-
101 1/8	65.00	65.00	65.00	65.00	65.00	47.19	-	-	-	-
107 1/8	65.00	65.00	65.00	65.00	65.00	47.19	-	-	-	-
113 1/8	65.00	65.00	65.00	65.00	65.00	-	-	-	-	-
119 1/8	65.00	65.00	65.00	65.00	65.00	-	-	-	-	-

* ADDITIONAL HINGES AND LOCK POINTS SHALL BE REQUIRED FOR DOOR TALLER THAN 120" TO MAINTAIN THE SAME MAXIMUM SPACING BETWEEN HINGES AND LOCK POINTS AS THE 120" TALL DOOR.

SEE SEPARATE APPROVALS FOR FRENCH DOORS TALLER THAN 120".

DESIGN PRESSURE TABLE (+/- PSF) - SINGLE DOOR										
LEAF HEIGHT (IN.)	LEAF WIDTH (IN.)									
	24	27	30	33	36	39	42	45	48	51
79 1/8	65.00	65.00	65.00	65.00	65.00	47.19	35.09	26.62	20.57	16.14
83 1/8	65.00	65.00	65.00	65.00	65.00	47.19	35.09	26.62	20.57	-
89 1/8	65.00	65.00	65.00	65.00	65.00	47.19	35.09	26.62	-	-
95 1/8	65.00	65.00	65.00	65.00	65.00	47.19	35.09	-	-	-
101 1/8	65.00	65.00	65.00	65.00	65.00	47.19	-	-	-	-
107 1/8	65.00	65.00	65.00	65.00	65.00	47.19	-	-	-	-
113 1/8	65.00	65.00	65.00	65.00	65.00	-	-	-	-	-
119 1/8	65.00	65.00	65.00	65.00	65.00	-	-	-	-	-
125 1/8	65.00	65.00	65.00	65.00	-	-	-	-	-	-
131 1/8	65.00	65.00	65.00	-	-	-	-	-	-	-
137 1/8	65.00	65.00	65.00	-	-	-	-	-	-	-
143 1/8	65.00	65.00	65.00	-	-	-	-	-	-	-
149 1/8	65.00	65.00	-	-	-	-	-	-	-	-
161 1/8	65.00	65.00	-	-	-	-	-	-	-	-
185 1/8	65.00	-	-	-	-	-	-	-	-	-

* ADDITIONAL HINGES AND LOCK POINTS SHALL BE REQUIRED FOR DOOR TALLER THAN 120" TO MAINTAIN THE SAME MAXIMUM SPACING BETWEEN HINGES AND LOCK POINTS AS THE 120" TALL DOOR.

EUROLINE
STEEL WINDOWS & DOORS

22600 SAVI RANCH PKWY
YORBA LINDA, CA 92887
PH: (877) 590-2714

TITLE: SERIES 900 THERMAL STEEL FRENCH/ SINGLE DOOR (WZ4) (IMPACT) TYPICAL ELEVATIONS & DESIGN PRESSURE TABLE

PREPARED BY:
BUILDING DROPS, INC.
1900 NE MIAMI COURT, SUITE 2-15
MIAMI, FL 33132
PH: (954) 399-8478
FAX: (954) 744-4738
WEB: www.buildingdrops.com

REMARKS	BY	DATE
A. 2026 FBC UPDATE	MS	7/21/2026

THE INSTALLATION DETAILS DESCRIBED HEREIN ARE GENERIC AND MAY NOT REFLECT ACTUAL CONDITIONS FOR A SPECIFIC SITE. IF SITE CONDITIONS CAUSE INSTALLATION TO DEVIATE FROM THE REQUIREMENTS DETAILED HEREIN, A LICENSED ENGINEER OR ARCHITECT SHALL PREPARE SITE SPECIFIC DOCUMENTS FOR USE WITH THIS DOCUMENT.

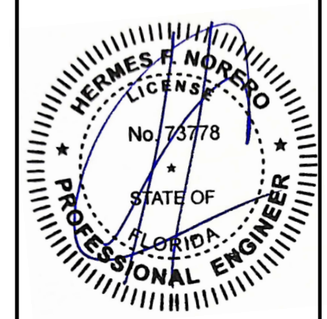

HERMES F. NORERO, P.E.
FLORIDA P.E. No 73778
BUILDING DROPS, INC
1900 NE MIAMI COURT, SUITE 2-15
MIAMI, FL 33132
FBPE CERT. OF AUTHORIZATION No. 29578

FL #: FL47872

DATE: 10.20.2025

DWG. BY: MS | CHK. BY: HFN

SCALE: NTS

DWG. #: ELS010

SHEET: 2 OF 7 | REV. A

7/27/2026 4:40 PM
c:\users\mengqisun\building drops, inc\building drops landing - common\projects\2026 code change projects\euroline steel windows & doors\cc-26-0522.2 - 2026 code change\dwgs\elc010 - a.dwg

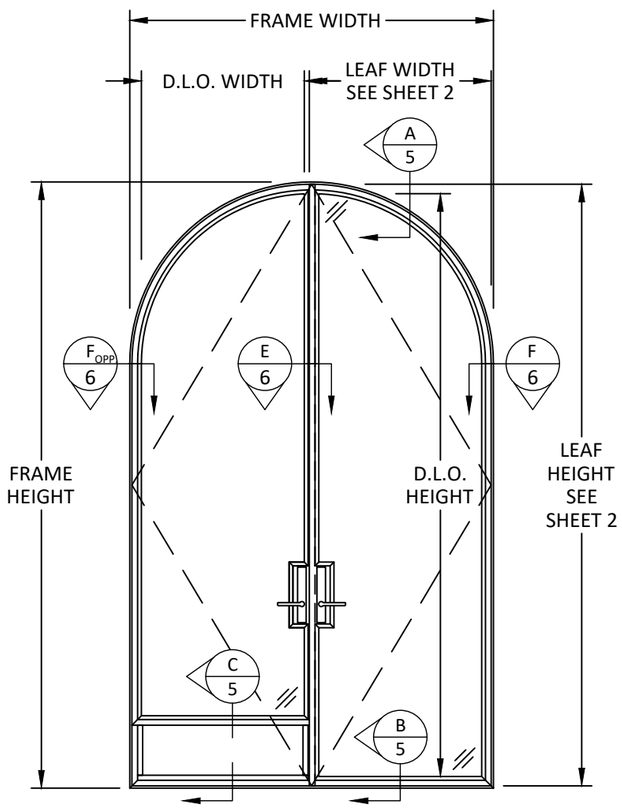

ALTERNATE ELEVATION

ROUND TOP FRENCH DOOR

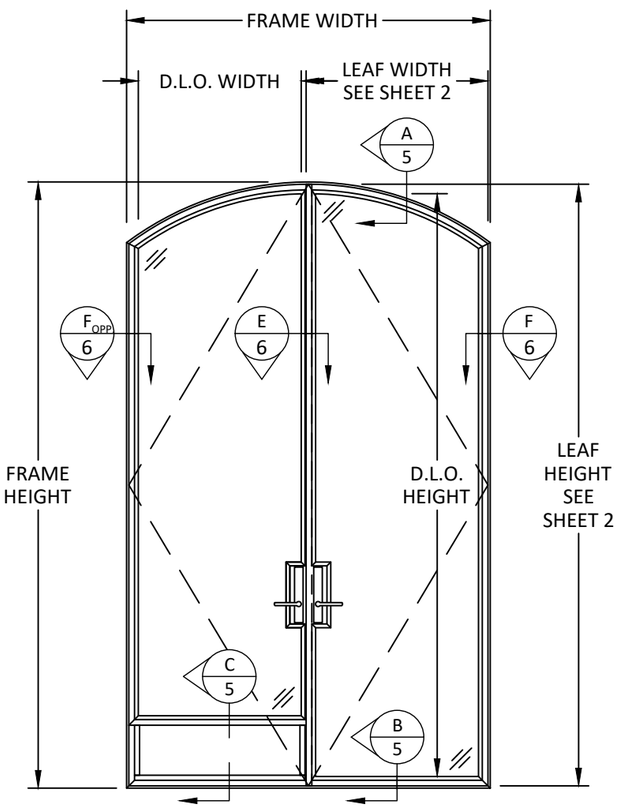

ALTERNATE ELEVATION

ARCH TOP FRENCH DOOR

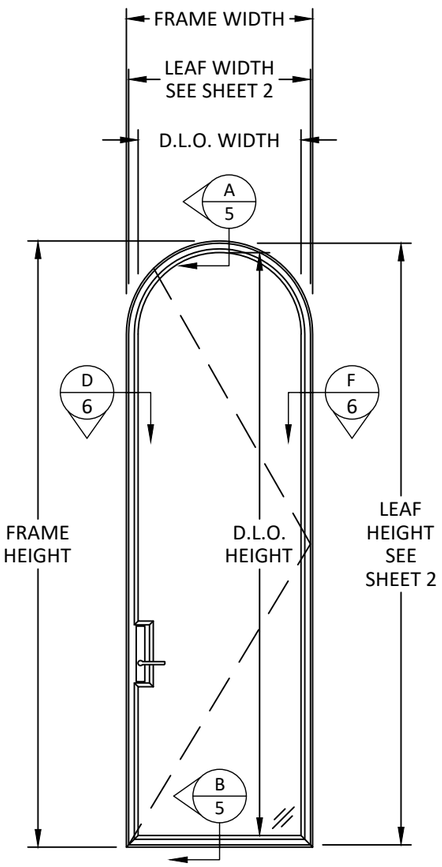

ALTERNATE ELEVATION

ROUND TOP SINGLE DOOR

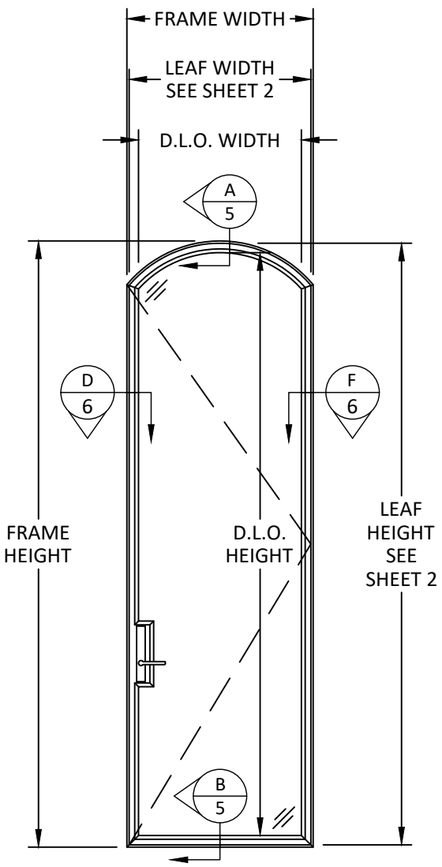

ALTERNATE ELEVATION

ARCH TOP SINGLE DOOR

EUROLINE
STEEL WINDOWS & DOORS

22600 SAVI RANCH PKWY
YORBA LINDA, CA 92887
PH: (877) 590-2714

TITLE:
SERIES 900 THERMAL STEEL FRENCH/
SINGLE DOOR (WZ4) (IMPACT)
ALTERNATE ELEVATIONS

PREPARED BY:
BUILDING DROPS, INC.
1900 NE MIAMI COURT, SUITE 2-15
MIAMI, FL 33132
PH: (954) 399-8478
FAX: (954) 744-4738
WEB: www.buildingdrops.com
BUILDING DROPS

REMARKS	BY	DATE
A. 2026 FBC UPDATE	MS	7/21/2026

THE INSTALLATION DETAILS DESCRIBED HEREIN ARE GENERIC AND MAY NOT REFLECT ACTUAL CONDITIONS FOR A SPECIFIC SITE. IF SITE CONDITIONS CAUSE INSTALLATION TO DEVIATE FROM THE REQUIREMENTS DETAILED HEREIN, A LICENSED ENGINEER OR ARCHITECT SHALL PREPARE SITE SPECIFIC DOCUMENTS FOR USE WITH THIS DOCUMENT.

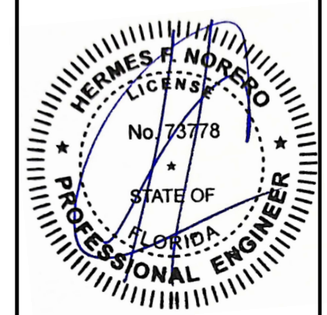

HERMES F. NORERO, P.E.
FLORIDA P.E. No 73778
BUILDING DROPS, INC
1900 NE MIAMI COURT, SUITE 2-15
MIAMI, FL 33132
FBPE CERT. OF AUTHORIZATION No. 29578

FL #: FL47872

DATE: 10.20.2025

DWG. BY: MS

CHK. BY: HFN

SCALE: NTS

DWG. #: ELS010

SHEET: 3 OF 7

REV. A

7/27/2026 4:40 PM
c:\users\mengdsun\building drops, inc\building drops landing - common\projects\2026 code change projects\euroline steel windows & doors\cc-26-0522.2 - 2026 code change\dwgs\els010 - a.dwg

7/27/2026 4:40 PM
c:\users\mengdsun\building drops, inc\building drops landing - common\projects\2026 code change projects\euroline steel windows & doors\cc-26-0522.2 - 2026 code change\dwgs\els010 - a.dwg

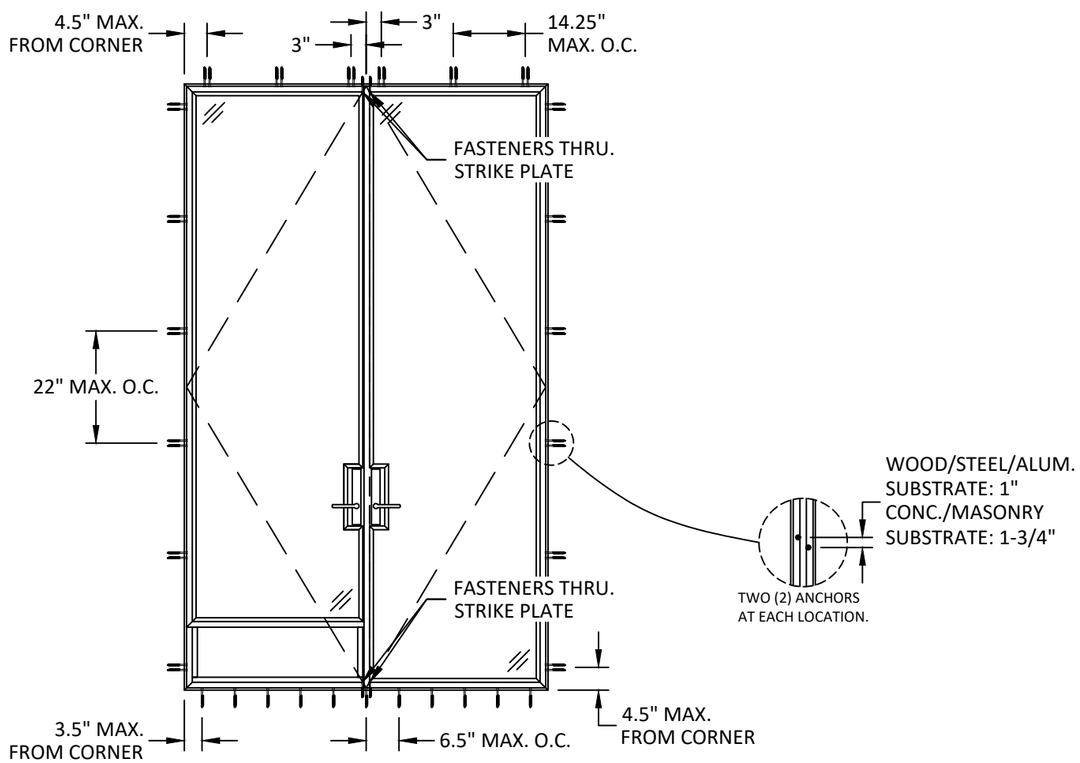

ANCHOR LAYOUT
FRENCH DOOR

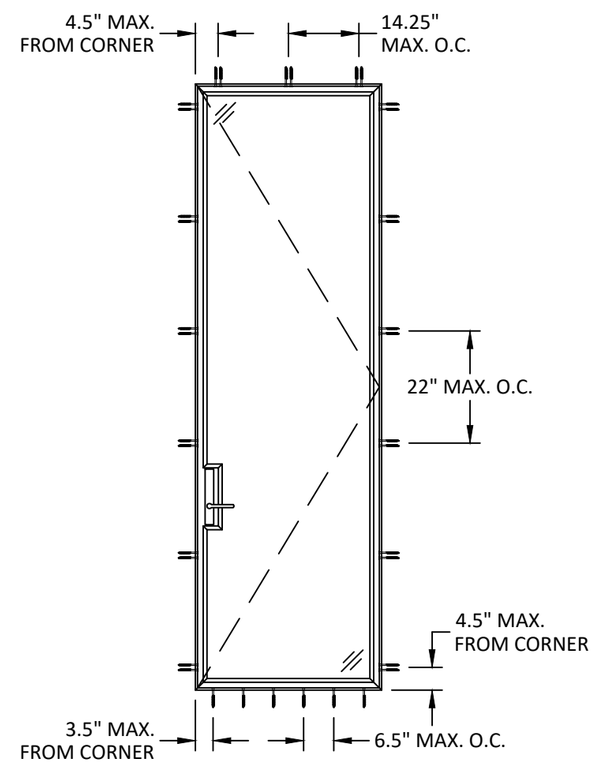

ANCHOR LAYOUT
SINGLE DOOR

ALTERNATE ELEVATIONS SHALL FOLLOW THE SAME ANCHOR LAYOUTS AS SHOWN ABOVE.

EUROLINE
STEEL WINDOWS & DOORS

22600 SAVI RANCH PKWY
YORBA LINDA, CA 92887
PH: (877) 590-2714

TITLE: SERIES 900 THERMAL STEEL FRENCH/ SINGLE DOOR (WZ4) (IMPACT)
ANCHOR LAYOUTS

PREPARED BY:
BUILDING DROPS, INC.
1900 NE MIAMI COURT, SUITE 2-15
MIAMI, FL 33132
PH: (954) 399-8478
FAX: (954) 744-4738
WEB: www.buildingdrops.com

REMARKS	BY	DATE
A. 2026 FBC UPDATE	MS	7/21/2026

THE INSTALLATION DETAILS DESCRIBED HEREIN ARE GENERIC AND MAY NOT REFLECT ACTUAL CONDITIONS FOR A SPECIFIC SITE. IF SITE CONDITIONS CAUSE INSTALLATION TO DEVIATE FROM THE REQUIREMENTS DETAILED HEREIN, A LICENSED ENGINEER OR ARCHITECT SHALL PREPARE SITE SPECIFIC DOCUMENTS FOR USE WITH THIS DOCUMENT.

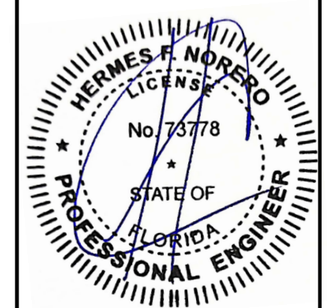

HERMES F. NORERO, P.E.
FLORIDA P.E. No 73778
BUILDING DROPS, INC
1900 NE MIAMI COURT, SUITE 2-15
MIAMI, FL 33132
FBPE CERT. OF AUTHORIZATION No. 29578

FL #: FL47872

DATE: 10.20.2025

DWG. BY: MS | CHK. BY: HFN

SCALE: NTS

DWG. #: ELS010

SHEET: 4 | REV. A

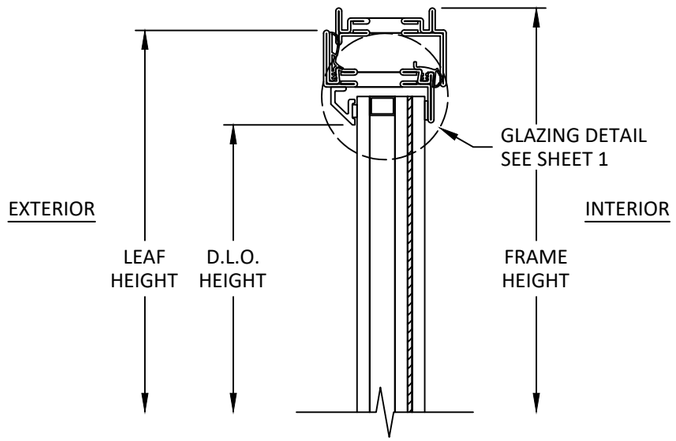

A/5 VERTICAL SECTION
HEAD

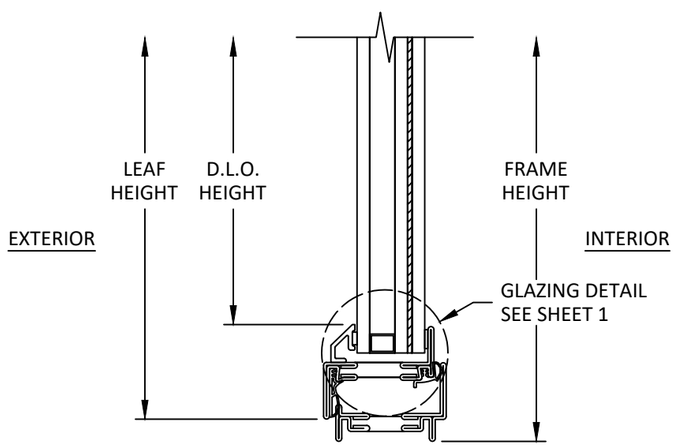

B/5 VERTICAL SECTION
SILL

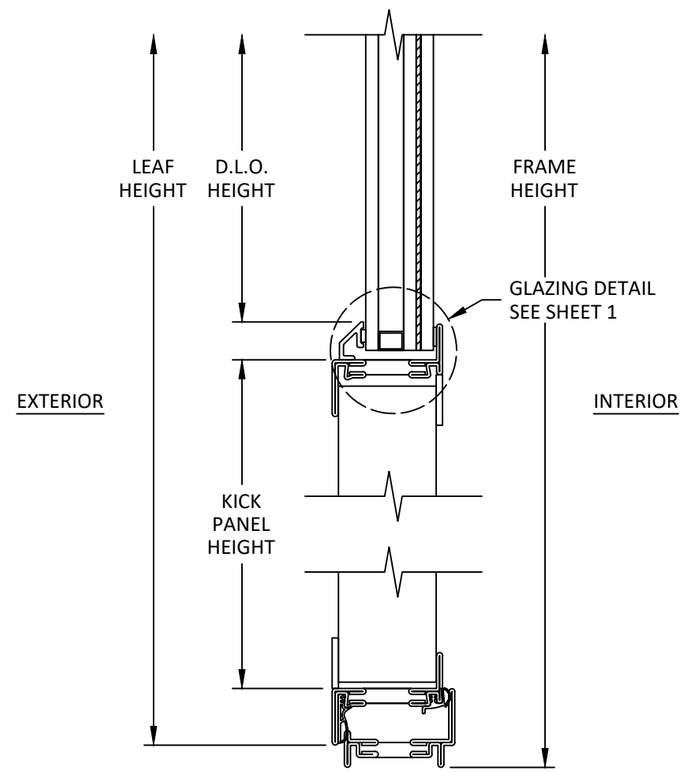

C/5 VERTICAL SECTION
SILL
WITH KICK PANEL

EUROLINE
STEEL WINDOWS & DOORS

22600 SAVI RANCH PKWY
YORBA LINDA, CA 92887
PH: (877) 590-2714

TITLE:
SERIES 900 THERMAL STEEL FRENCH/
SINGLE DOOR (WZ4) (IMPACT)
VERTICAL SECTIONS

PREPARED BY:
BUILDING DROPS, INC.
1900 NE MIAMI COURT, SUITE 2-15
MIAMI, FL 33132
PH: (954) 399-8478
FAX: (954) 744-4738
WEB: www.buildingdrops.com

REMARKS	BY	DATE
A. 2026 FBC UPDATE	MS	7/21/2026

THE INSTALLATION DETAILS DESCRIBED HEREIN ARE GENERIC AND MAY NOT REFLECT ACTUAL CONDITIONS FOR A SPECIFIC SITE. IF SITE CONDITIONS CAUSE INSTALLATION TO DEVIATE FROM THE REQUIREMENTS DETAILED HEREIN, A LICENSED ENGINEER OR ARCHITECT SHALL PREPARE SITE SPECIFIC DOCUMENTS FOR USE WITH THIS DOCUMENT.

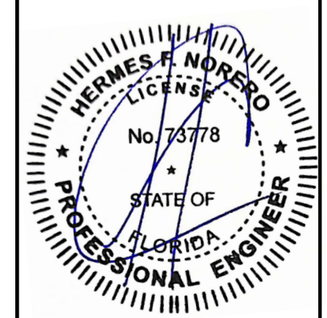

HERMES F. NORERO, P.E.
FLORIDA P.E. No 73778
BUILDING DROPS, INC
1900 NE MIAMI COURT, SUITE 2-15
MIAMI, FL 33132
FBPE CERT. OF AUTHORIZATION No. 29578

FL #: FL47872

DATE: 10.20.2025

DWG. BY: MS | CHK. BY: HFN

SCALE: NTS

DWG. #: ELS010

SHEET: 5 | REV. A

OF 7

7/27/2026 4:40 PM
c:\users\menggisun\building drops, inc\building drops landing - common\projects\2026 code change projects\euroline steel windows & doors\cc-26-0522.2 - 2026 code change\dwgs\els010 - a.dwg

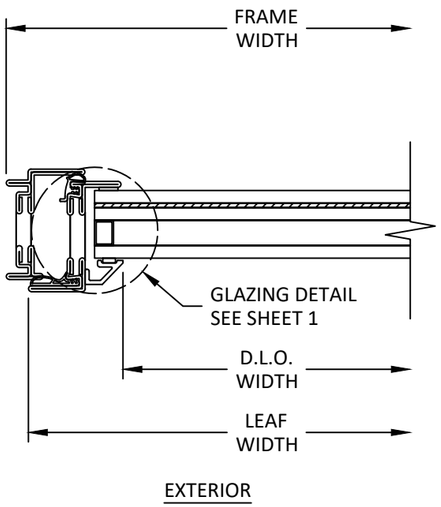

D/6 HORIZONTAL SECTION
LOCK JAMB

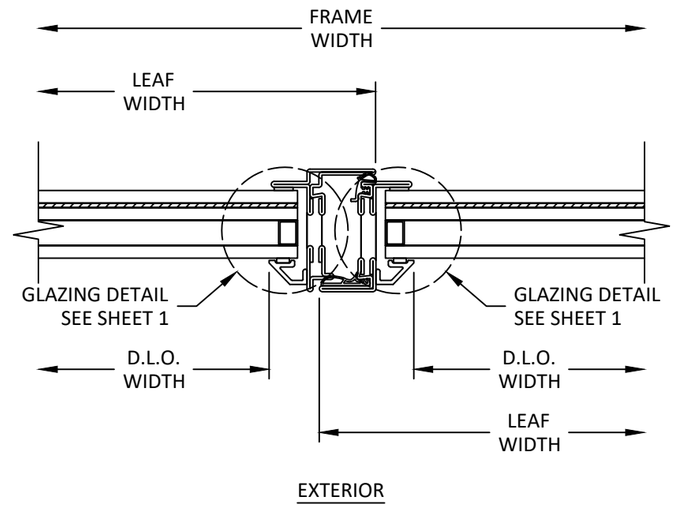

E/6 HORIZONTAL SECTION
MEETING STILE

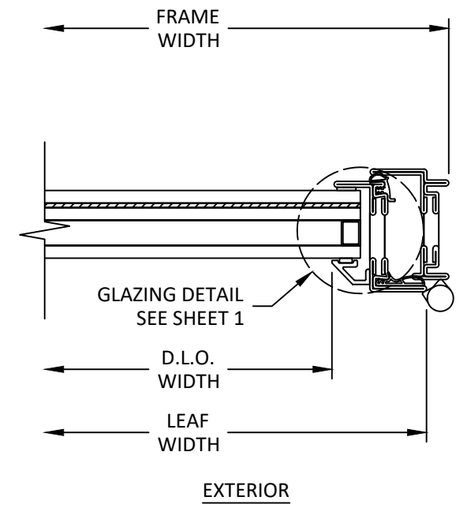

F/6 HORIZONTAL SECTION
HINGE JAMB

EUROLINE
STEEL WINDOWS & DOORS

22600 SAVI RANCH PKWY
YORBA LINDA, CA 92887
PH: (877) 590-2714

TITLE: SERIES 900 THERMAL STEEL FRENCH/ SINGLE DOOR (WZ4) (IMPACT)
HORIZONTAL SECTIONS

PREPARED BY:
BUILDING DROPS, INC.
1900 NE MIAMI COURT, SUITE 2-15
MIAMI, FL 33132
PH: (954) 399-8478
FAX: (954) 744-4738
WEB: www.buildingdrops.com

REMARKS	BY	DATE
A. 2026 FBC UPDATE	MS	7/21/2026

THE INSTALLATION DETAILS DESCRIBED HEREIN ARE GENERIC AND MAY NOT REFLECT ACTUAL CONDITIONS FOR A SPECIFIC SITE. IF SITE CONDITIONS CAUSE INSTALLATION TO DEVIATE FROM THE REQUIREMENTS DETAILED HEREIN, A LICENSED ENGINEER OR ARCHITECT SHALL PREPARE SITE SPECIFIC DOCUMENTS FOR USE WITH THIS DOCUMENT.

HERMES F. NORERO
LICENSE
No. 73778
STATE OF FLORIDA
PROFESSIONAL ENGINEER

HERMES F. NORERO, P.E.
FLORIDA P.E. No 73778
BUILDING DROPS, INC
1900 NE MIAMI COURT, SUITE 2-15
MIAMI, FL 33132
FBPE CERT. OF AUTHORIZATION No. 29578

FL #: FL47872
DATE: 10.20.2025
DWG. BY: MS
CHK. BY: HFN
SCALE: NTS
DWG. #: ELS010
SHEET: 6
REV. A
OF 7

7/27/2026 4:40 PM
c:\users\mengqisun\building drops, inc\building drops landing - common\projects\2026 code change projects\euroline steel windows & doors\cc-26-0522.2 - 2026 code change\dwgs\els010 - a.dwg

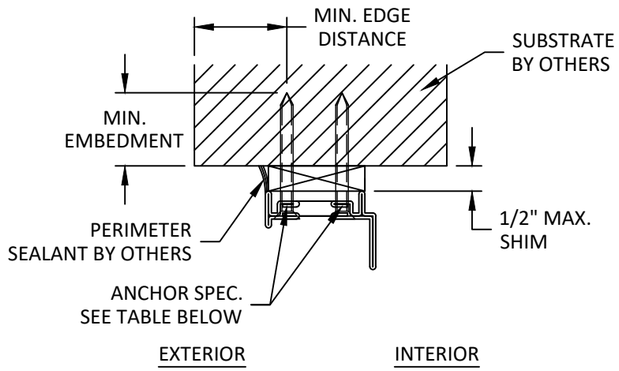

G/7 INSTALLATION DETAILS

HEAD SHOWN
JAMB SIMILAR

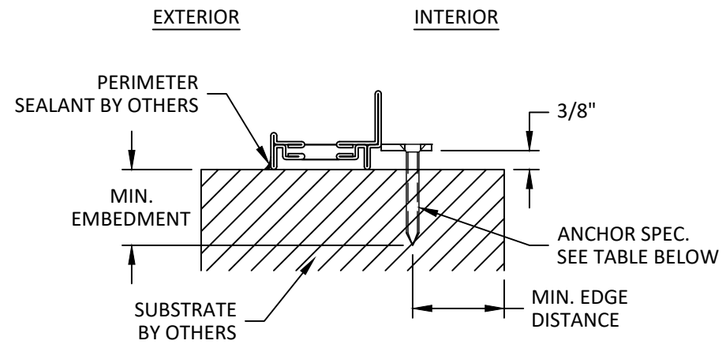

H/7 INSTALLATION DETAILS

SILL SHOWN

INSTALLATION NOTES:

1. FOR INSTALLATION AT HEAD AND JAMBS, TWO (2) INSTALLATION ANCHORS INTO SUBSTRATE ARE REQUIRED AT EACH ANCHOR LOCATION SHOWN ON SHEET 3.
2. FOR INSTALLATION AT SILL, ONE (1) INSTALLATION ANCHOR INTO SUBSTRATE IS REQUIRED AT EACH ANCHOR LOCATION SHOWN ON SHEET 3.
3. THE NUMBER OF INSTALLATION ANCHORS DEPICTED IS THE MINIMUM NUMBER OF ANCHORS TO BE USED FOR PRODUCT INSTALLATION OF THE MAXIMUM SIZE LISTED.
4. INSTALL INDIVIDUAL INSTALLATION ANCHORS WITHIN A TOLERANCE OF ±1/4 INCH THE DEPICTED LOCATION & SPACING IN THE ANCHOR LAYOUT DETAILS (I.E., WITHOUT CONSIDERATION OF TOLERANCES). TOLERANCES ARE NOT CUMULATIVE FROM ONE INSTALLATION ANCHOR TO THE NEXT.
5. SHIM AS REQUIRED AT EACH INSTALLATION ANCHOR WITH LOAD BEARING SHIM(S). MAXIMUM ALLOWABLE SHIM STACK TO BE 1/2 INCH. SHIM WHERE SPACE OF 1/16 INCH OR GREATER OCCURS. SHIM(S) SHALL BE CONSTRUCTED OF HIGH DENSITY PLASTIC OR BETTER.
6. FOR MASONRY OR CONCRETE OPENINGS, A 1X WOOD BUCK MAY BE USED (OPTIONAL) AS LONG AS THE MINIMUM EMBEDMENT AND EDGE DISTANCE REQUIREMENTS ARE STILL MET WITHIN THE CORRESPONDING HOST SUBSTRATE. SEE GENERAL NOTE #3 ON SHEET 1 FOR MORE INFORMATION.
7. MINIMUM EMBEDMENT AND EDGE DISTANCE EXCLUDE WALL FINISHES, INCLUDING BUT NOT LIMITED TO STUCCO, FOAM, BRICK VENEER, AND SIDING.
8. INSTALLATION ANCHORS AND ASSOCIATED HARDWARE MUST BE MADE OF CORROSION RESISTANT MATERIAL OR HAVE A CORROSION RESISTANT COATING.
   - 8.1. FASTENERS USED WITHIN 3,000 FEET OF A SALTWATER COASTLINE AND INSTALLED IN ENCLOSED SPACES SHALL BE GALVANIZED IN ACCORDANCE WITH SECTION 1711.1.1 (E.G., ASTM A153 CLASS D, ASTM A641 CLASS 3S, OR EQUIVALENT CORROSION RESISTANCE).
   - 8.2. CONNECTORS AND METAL PLATES USED WITHIN 3,000 FEET OF A SALTWATER COASTLINE SHALL BE STANDARD GALVANIZED IN ACCORDANCE WITH SECTION 1711.1.2 (E.G., ASTM A653 G90, ASTM A123, OR PROTECTIVE COATING PER TPI 1).
9. FOR HOLLOW BLOCK AND GROUT FILLED BLOCK, DO NOT INSTALL INSTALLATION ANCHORS INTO MORTAR JOINTS. EDGE DISTANCE IS MEASURED FROM FREE EDGE OF BLOCK OR EDGE OF MORTAR JOINT INTO FACE SHELL OF BLOCK.
10. INSTALLATION ANCHORS SHALL BE INSTALLED IN ACCORDANCE WITH ANCHOR MANUFACTURER'S INSTALLATION INSTRUCTIONS AND ANCHORS SHALL NOT BE USED IN SUBSTRATES WITH STRENGTHS LESS THAN THE MINIMUM STRENGTH SPECIFIED BY THE ANCHOR MANUFACTURER.

ANCHOR SCHEDULE

SUBSTRATE	ANCHOR TYPE	MIN. EMBEDMENT	MIN. EDGE DISTANCE
WOOD: MIN. S.G. = 0.55	#14 WOOD SCREW	1-1/2"	1"
STEEL: MIN. 18 GA. MIN. Fy = 33 ksi	1/4" GRADE 5 SELF-DRILLING/ SELF-TAPPING SCREW	3 THREADS MIN PENETRATION BEYOND METAL	1/2"
ALUMINUM: MIN. 1/8" THICK MIN. 6063-T5			
CONCRETE: MIN. f'c = 3000 psi	1/4" ITW TAPCON	1-1/2"	1-1/2"
MASONRY: HOLLOW OR GROUT-FILLED BLOCK per ASTM C90, MIN. 2000 PSI		1"	2"

EUROLINE STEEL WINDOWS & DOORS
22600 SAVI RANCH PKWY
YORBA LINDA, CA 92887
PH: (877) 590-2714

TITLE: SERIES 900 THERMAL STEEL FRENCH/ SINGLE DOOR (WZ4) (IMPACT) INSTALLATION DETAILS & NOTES

PREPARED BY: BUILDING DROPS, INC.
1900 NE MIAMI COURT, SUITE 2-15
MIAMI, FL 33132
PH: (954) 399-8478
FAX: (954) 744-4738
WEB: www.buildingdrops.com

REMARKS	BY	DATE
A. 2026 FBC UPDATE	MS	7/21/2026

THE INSTALLATION DETAILS DESCRIBED HEREIN ARE GENERIC AND MAY NOT REFLECT ACTUAL CONDITIONS FOR A SPECIFIC SITE. IF SITE CONDITIONS CAUSE INSTALLATION TO DEVIATE FROM THE REQUIREMENTS DETAILED HEREIN, A LICENSED ENGINEER OR ARCHITECT SHALL PREPARE SITE SPECIFIC DOCUMENTS FOR USE WITH THIS DOCUMENT.

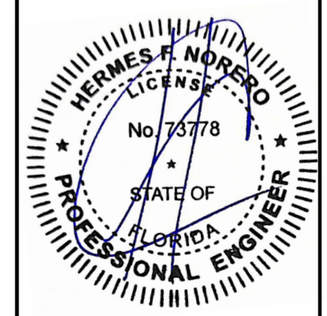

HERMES F. NORERO, P.E.
FLORIDA P.E. No 73778
BUILDING DROPS, INC
1900 NE MIAMI COURT, SUITE 2-15
MIAMI, FL 33132
FBPE CERT. OF AUTHORIZATION No. 29578

FL #: FL47872

DATE: 10.20.2025

DWG. BY: MS | CHK. BY: HFN

SCALE: NTS

DWG. #: ELS010

SHEET: 7 OF 7 | REV. A

7/27/2026 4:40 PM
c:\users\mengalsun\building drops, inc\building drops landing - common\projects\2026 code change projects\euroline steel windows & doors\cc-26-0522.2 - 2026 code change\dwgs\els010 - a.dwg